LAS ASD LRA ACD

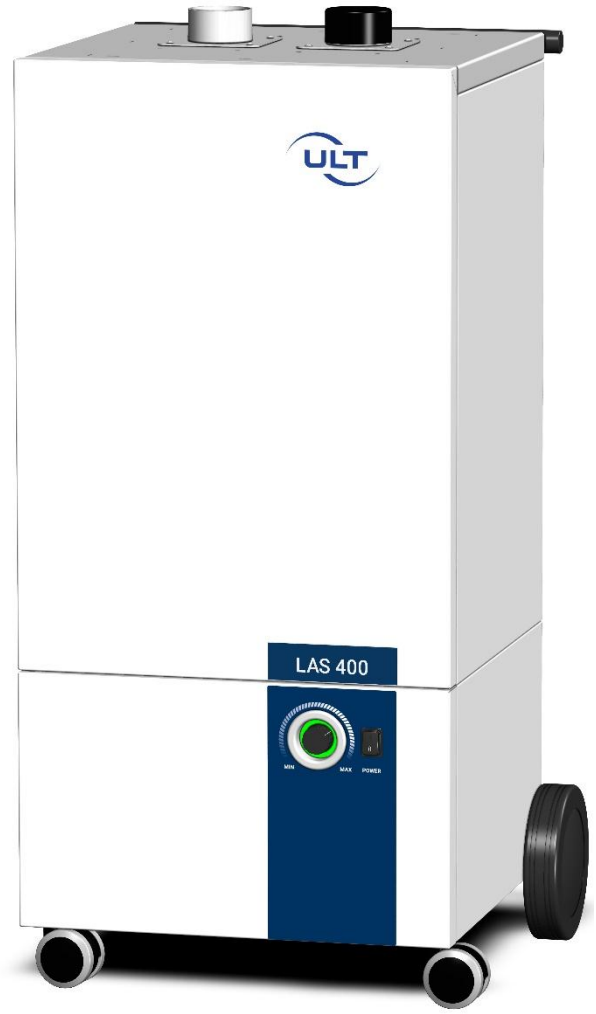

Technical Documentation
ULT 400.1

Version 002

air quality

Contents

Description of Product Series **4**
Features – ULT 400.1 Extraction and Filtration Unit 4
Equipment **5**
Technical Data – ULT 400.1 ..... **7**
Characteristic Curves and Operating Modes (230 V) 8
ACD Series – Vapors, Odors, and Gases **10**
Areas of Application 10
Operating Principle 10
Device Variants 11
ACD 400.1 A28 11
ASD Series – Dust and Smoke **13**
Areas of Application 13
Operating Principle 13
Device Variants 14
ASD 400.1 TH (M) 14
ASD 400.1 TH (L) 15
LAS Series – Laser Smoke **16**
Areas of Application 16
Operating Principle 16
Device Variants 17
LAS 400.1 FHA14 (M) 17
LAS 400.1 FHA28 (L) 18
LAS 400.1 FH (L) 18
LRA Series – Soldering Fumes **19**
Areas of Application 19
Operating Principle 19
Device Variants 20
LRA 400.1 HA14 20
Accessory items **21**
Suction system DN80 21
Suction system DN100 22
Air Outlet System DN 160 23
Interface Accessories 23

Replacement Filters **24**
ACD 24
ASD 25
LAS 25
LRA 26
Set of replacement films 26

Attachments:

- Drawing for device size “M”
- Drawing for device size “L”
- Interface diagram M12

Description of Product Series

The **product range in the ULT 400.1 series** can be used for collection and filtration of harmful substances and unwanted substances in the form of dusts and gases. Suitable multi-stage filtration systems are available **for all industrial applications** to deal with different configurations of harmful or unwanted substances.

The harmful and unwanted substances produced in the relevant customer process are collected via collection elements directly at the point of creation and are then filtered by the units in the ULT 400.1 series. Through targeted combination of the available individual filters, **highest separation rates** are achieved. The underlying filtration technology uses particle separation techniques for dusts and adsorption and chemisorption techniques for gaseous substances.

Thanks to the high degree of purification, the filtered clean gas can be directed back to the working space (**recirculated air** mode). As a result there are no thermal losses. If recirculated air mode is not desired, an optionally available pipe nozzle can be easily installed to quickly and simply reconfigure the setup so that the outlet air is discharged rather than being fed back in. The filtered clean gas is then directed into an **air outlet** system.

The units in the ULT 400.1 series can be optionally combined with a **wide range of accessories**. Suitable accessory parts can be selected based on the individual requirements of the customer.

Features – ULT 400.1 Extraction and Filtration Unit

- **Interchangeable filter system** – for safe removal with minimum contamination risk
- New **diffuser** for uniform filter surface loads and longer service life
- **Low-cost replacement filters** thanks to the multi-stage filtration system with cost-effective pre-filter elements with high absorption capacity
- Suitable for a **wide range of applications**: the blower used is suitable for high vacuums and high volumetric flow rates
- Ready for installation of console brackets and hose connections
- **Low energy consumption** thanks to energy-efficient electronics
- Electrical equipment designed for **global use**: suitable for operation at 110 V - 240 V
- All electrical components compliant with UL and CE standards
- Integrated soundproofing ensures extremely **quiet operation**
- Robust sheet steel enclosure with **powder coating**
- **Mobile unit** with casters
- All interfaces are rear-mounted
- Operating and control elements are located on the front

Equipment

Figure 1: Front operating panel

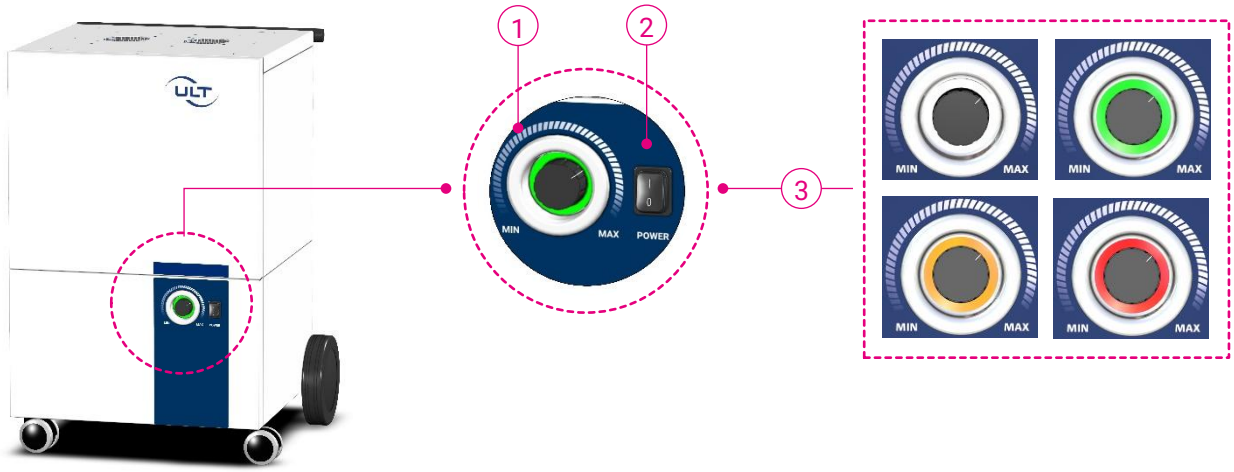

1 Potentiometer

Selectable assignments:

- Direct control of the blower speed: freely set a fixed operating point within the limits of the maximum blower performance
- ecoflow CS®:
  Automatic compensation for increased filter saturation and varying numbers of collection points

2 ON/OFF switch

3 LED status ring

Operating status indicators

- Standby mode via remote control (white)
- Operation with no problems (green)
- Malfunction due to error condition (orange/red flashing)

- Particulate filter saturation indicator:
  - Particulate filter nearly saturated (orange)
  - Particulate filter saturated (red)

Figure 2: Interfaces on the rear (MD.21)

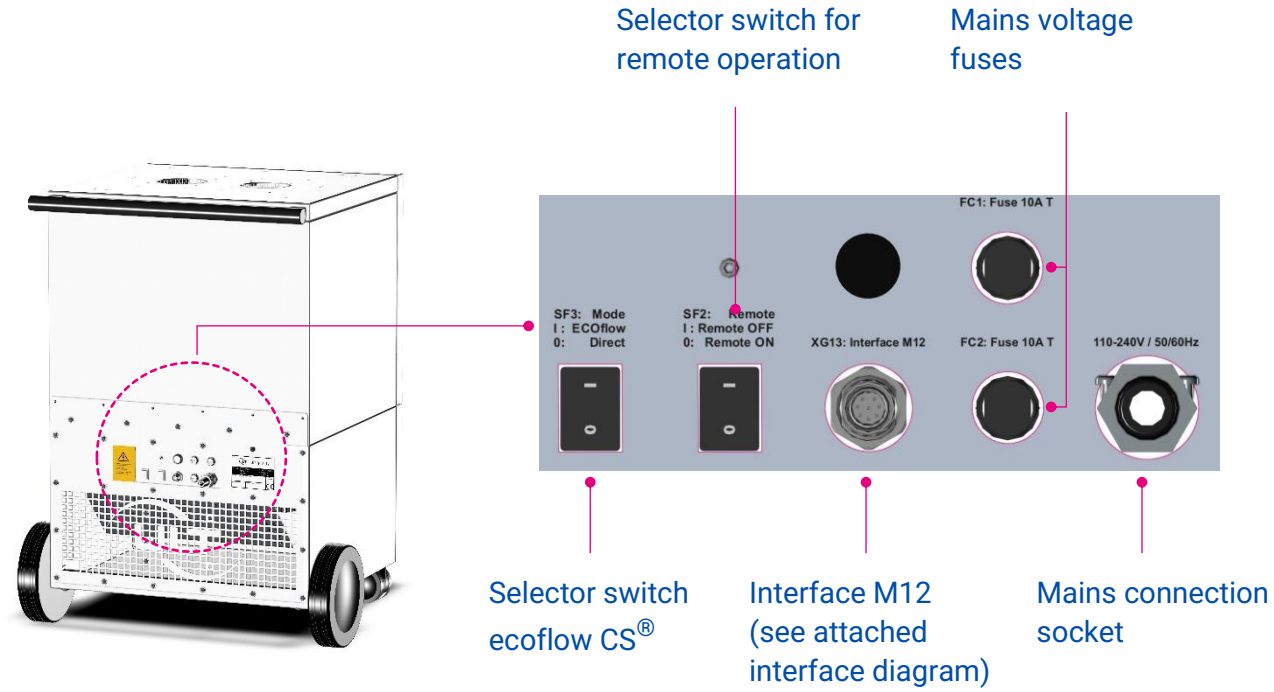

Figure 3: Interfaces on the rear (MD.17)

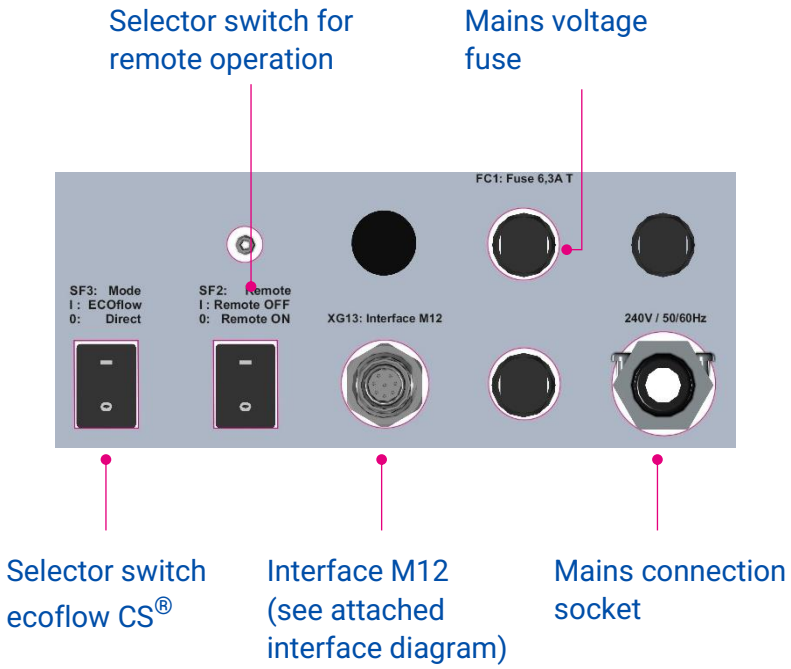

Technical Data – ULT 400.1

Table 1: Technical Data – ULT 400.1

PARAMETER	UNIT	Blower MD.21	Blower MD.17
Max. volumetric flow rate	m³/h	600	1,000
Max. vacuum	Pa	9,800	2,600
Rated operating points (fan characteristic curve)	m³/h @ Pa	450 @ 2,500 300 @ 5,000	300 @ 2,500
Protection class	IP	54	
Sound level (@ 50% - 100% volumetric flow rate)	dB(A)	< 60	< 60
Vacuum generator type		EC blower	
Rated voltage	VAC	1~110 … 240	1~230 V
Rated frequency	Hz	50/60	
Voltage level		120 V / 230 V	230 V
Rated motor power	kW	1.4 / 1.4	0.7
Rated current	A	15.4 / 10	3.6
Volumetric flow rate controller		Yes	
Particulate filter saturation indicator	Visual	Yes	
Interface M12		Yes	
		Configuration "M"	Configuration "L"
Dimensions (width x depth x height)	mm	670 x 600 x 867	670 x 600 x 1,163
Weight (without filter)	kg	Approx. 44	Approx. 48
Max. weight of filter	kg	Approx. 48	Approx. 60
Air intake versions:	Connecting piece	2x Ø 80 mm connector Optional Ø 100 mm connector Optional Ø 75 mm Alsident console bracket Optional Ø 100 mm Alsident console bracket	
	Connection options	Hose connection or optional arm mounting with console bracket	
Air Outlet:		Outlet grille Outlet nozzle Ø 160 mm (optional)	
	Position	Rear of unit at bottom	
Mains cable EU (CEE 7/7)	m	3.0 (country-specific versions can be selected)	

Characteristic Curves and Operating Modes (230 V)

Figure 3: Characteristic curves for LAS MD.21 FHA28 and ASD MD.21 TH (M)

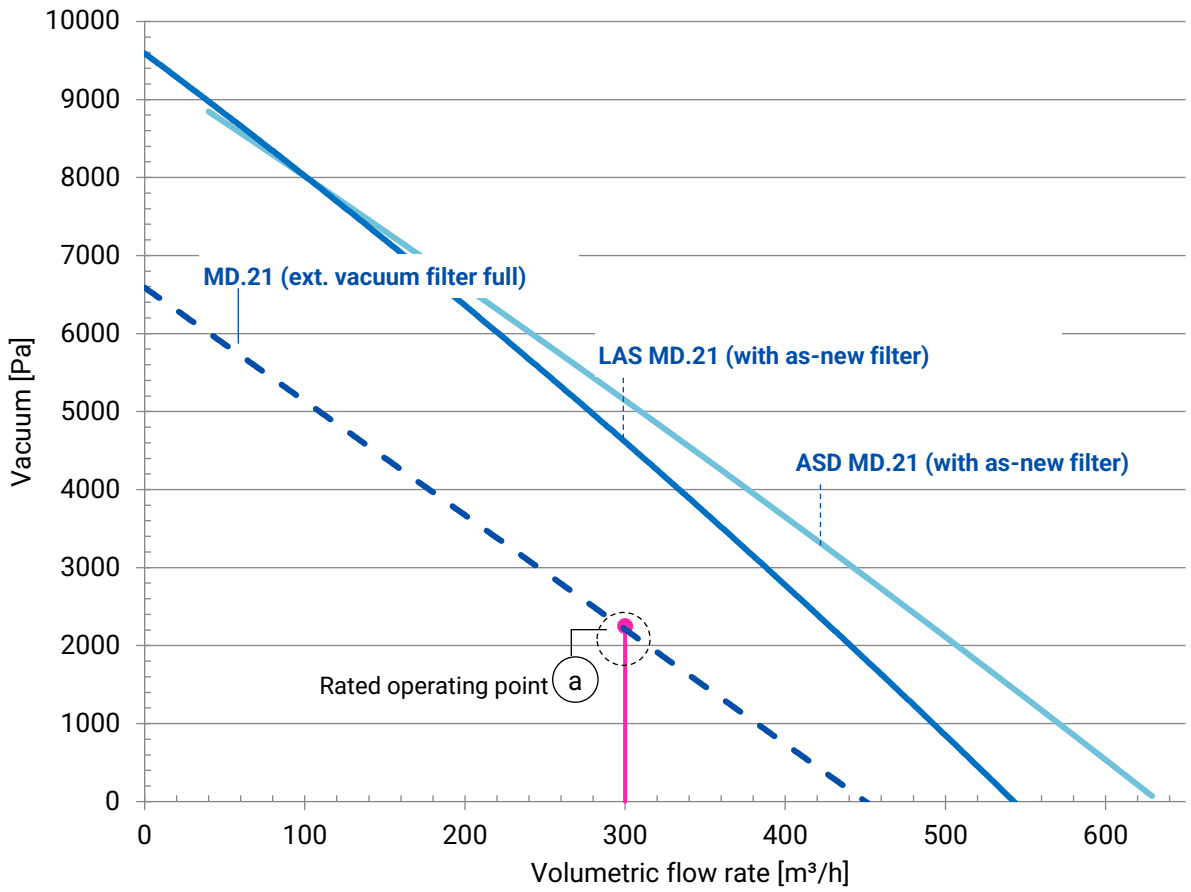

Note:
LAS MD.21 FHA28 – Filter configuration with the highest differential pressure
ASD MD.21 TH (M) – Filter configuration with the lowest differential pressure

Figure 4: Characteristic curves for LAS MD.17 FHA28 and ASD MD.17 TH (M)

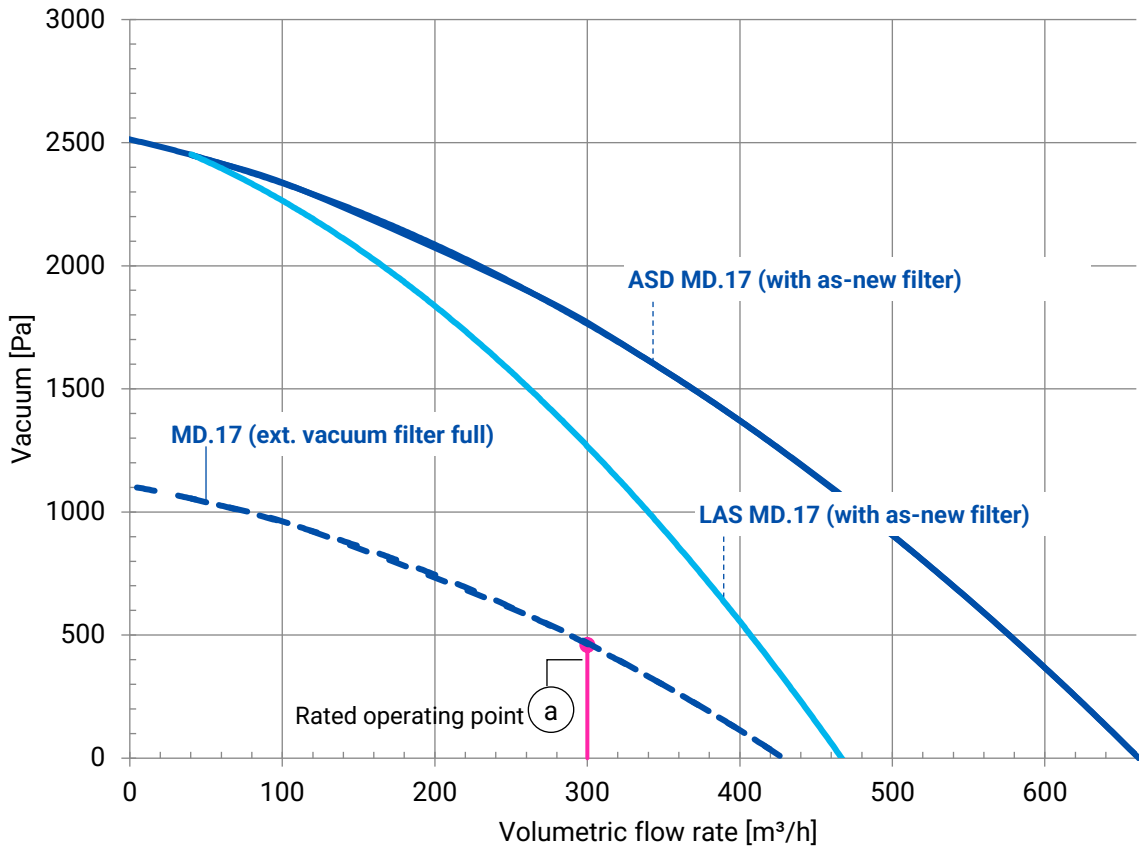

Note:
LAS MD.17 FHA28 – Filter configuration with the highest differential pressure
ASD MD.17 TH (M) – Filter configuration with the lowest differential pressure

ACD Series – Vapors, Odors, and Gases

Areas of Application

Gluing | Pre-treatment | Painting | Printing | Cleaning | Laminating | Casting

Operating Principle

On the clean gas side of the filter, an EC blower with a high-pressure reserve generates a volumetric flow rate that is matched to the target application. The volumetric flow rate can be individually regulated to a freely adjustable setting. The raw gas containing pollutants or harmful substances is thus reliably extracted.

The coarse dust particles are separated out in the first filter stage and retained. The separation (adsorption) of air impurities in the form of gas or vapor takes place in the activated carbon filter.

The filtration effect of the activated carbon is based on adsorption, i.e. the process by which (gaseous) substances adhere to the surface of the activated carbon. In general, physical adsorption does not involve any chemical changes to the substance being adsorbed. The filter design is matched to the nominal volumetric flow rate of the devices, and as a result the contact time is sufficient in order to achieve good adsorption behavior. For many gases and gas mixtures activated carbon is not suitable as an adsorbent. In these cases, chemisorption can be used as an alternative or additional separation method. Here, a chemical change takes place in the substances that are to be separated out.

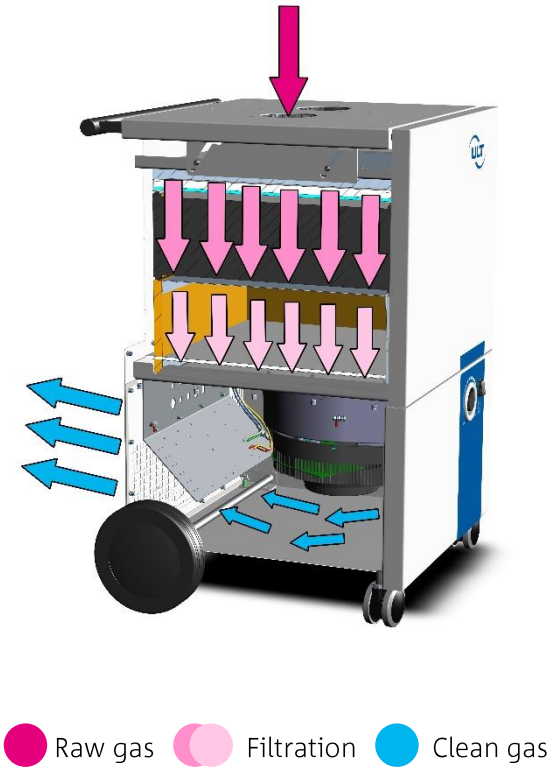

If this method is used, the filter is filled with a mixture of activated carbon and chemisorption agent or the activated carbon is replaced altogether with chemisorption agent. Thanks to the high degree of purification, the filtered clean gas can be directed back to the working space (recirculated air mode). As a result there are no thermal losses.

Recirculated air mode is not permitted when the equipment is used to extract substances that are carcinogenic, mutagenic, or toxic for reproduction. In these cases the optional outlet nozzle should be mounted on the outlet side. The filtered clean gas must be directed via a connected pipe section into a central air outlet system.

Device Variants

Different filter combinations are available for the extraction and filtration of gases, odors, and vapors. The suitability of the filter materials that are available for separating out the impurities depends on the pollutants/harmful substances in question. For competent advice and help choosing the right filter material, please contact your local dealer or get in touch with ULT AG directly via ult@ult.de.

The devices in the ULT 400.1 series can be equipped with the following filter configurations based on the individual customer requirements:

ACD 400.1 A28

Table 2: ACD 400.1 A28

Part number / complete unit:		1-00182 (MD.21), 1-00193 (MD.17)
Filter for organic gases:		Main filter module A28
(1)	Interchangeable frame with dust pre-filter	
	Filter mat M5	ISO Coarse > 85% in acc. with ISO 16890
(2)	Adsorption filter cassette A14	
	Filter medium:	Activated carbon fill (14 kg)
(3)	Adsorption filter cassette A14	
	Filter medium:	Activated carbon fill (14 kg)

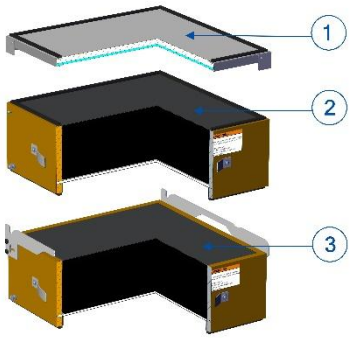

Table 3: ACD 400.1 AC39 (optional filter configuration)

Part number / optional equipment:		9-00244
Filter for gas mixtures:		Main filter module AC39
(1)	Interchangeable frame with dust pre-filter	
	Filter mat M5	ISO Coarse > 85% in acc. with ISO 16890
(2)	Chemisorption filter cassette AC19	
	Filter medium:	Granulate fill with 50% activated carbon and 50% chemisorption agent (19 kg in total)
(3)	Chemisorption filter cassette AC19	
	Filter medium:	Granulate fill with 50% activated carbon and 50% chemisorption agent (19 kg in total)

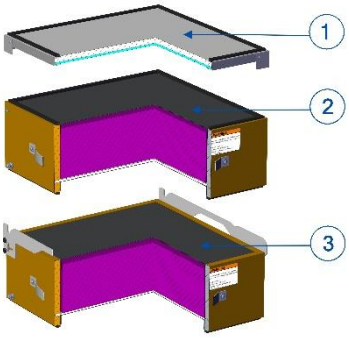

Table 4: ACD 400.1 C50 (optional filter configuration)

Part number / optional equipment::		9-00245
Filter for organic gases:		Main filter module C50
(1)	Interchangeable frame with dust pre-filter	
	Filter mat M5	ISO Coarse > 85% in acc. with ISO 16890
(2)	Chemisorption filter cassette C25	
	Filter medium:	Chemisorption agent (25 kg in total)
(3)	Chemisorption filter cassette C25	
	Filter medium:	Chemisorption agent (25 kg in total)

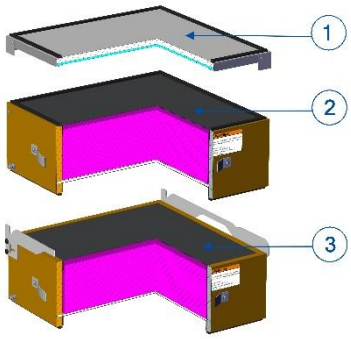

ASD Series – Dust and Smoke

Areas of Application

Grinding | Engraving | Polishing | Filling and Dosing Processes | Restoration

Operating Principle

On the clean gas side of the filter, an EC blower with a high pressure reserve generates a volumetric flow rate that is matched to the target application. The volumetric flow rate can be individually regulated to a freely adjustable setting. The raw gas containing pollutants or harmful substances is thus reliably extracted.

In production processes in which powdery substances are processed or in which materials are sawn, milled, or ground, dust will contaminate the working area. In addition, smoke can be generated in mechanical processes due to heating of the processed materials. Dust and smoke are harmful to health and will adversely affect the quality of production processes. As a result, it is important to remove these pollutants/harmful substances from the working area.

Two filter solutions with different filter cartridges for separation of the generated particles are available for this in the ASD series. By regularly changing the pre-filtration elements at shorter intervals it is possible to prevent premature saturation of the downstream HEPA main filter element and preserve the functionality of the main filter for a long period of time.

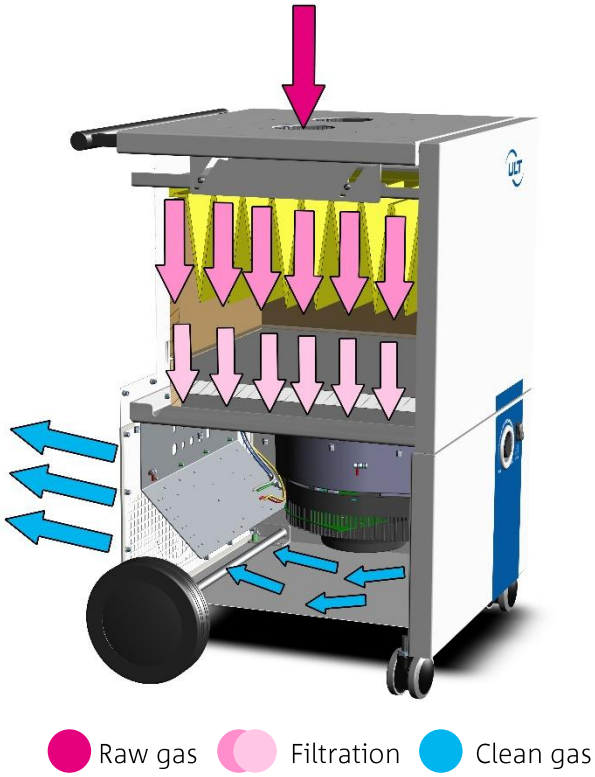

Finest suspended solids are retained by the HEPA filter of the particulate filter cassette.

Thanks to the high degree of purification, the filtered clean gas can be directed back to the working space (recirculated air mode). As a result there are no thermal losses.

Recirculated air mode is not permitted when the equipment is used to extract substances that are carcinogenic, mutagenic, or toxic for reproduction. In these cases the optional outlet nozzle should be mounted on the outlet side. The filtered clean gas must be directed via a connected pipe section into a central air outlet system.

Device Variants

Different filter combinations are available for the extraction and filtration of air impurities in the form of dust and smoke. The suitability of the different filter combinations that are available for separating out the impurities depends on the machining process in question. For competent advice and help choosing the right filter combination, please contact your local dealer or get in touch with ULT AG directly via ult@ult.de.

The devices in the ULT 400.1 series can be equipped with the following filter configurations based on the individual customer requirements:

ASD 400.1 TH (M)

An upstream bag filter F retains a large proportion of the generated particles. Thanks to the special way in which it is folded, a large volume is available for holding back coarse dusts.
Finest suspended solids are retained by the HEPA H14 filter of the filter cassette H14. This guarantees a particle separation rate of 99.995%.

Table 5: ASD 400.1 TH (M)

Part number / complete unit:	1-00184 (MD.21), 1-00194 (MD.17)
Filter configuration for dust and smoke:	Main filter module TH
(1) Pocket filter F, fine dust filter	
Filter class:	ISO ePM_1 80% in acc. with ISO 16890
(2) Empty frame for pocket filter	
(3) Particulate filter cassette H14	
Filter class:	H14 HEPA filter, particulate air filter in acc. with EN 1822

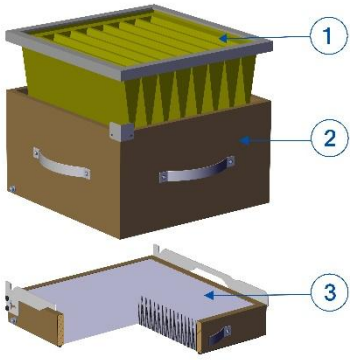

ASD 400.1 TH (L)

Alternatively, a higher device version is also available in which a larger bag filter is used for pre-separation. This is particularly well suited to processes in which larger amounts of dusts and fluff are generated. The bag filter offers a very large storage volume and is therefore also suitable for accommodating coarser extracted machining residue that is not in dust form.
Fine suspended solids are retained by the HEPA H13 filter of the filter cassette H13. This guarantees a particle separation rate of 99.95%.

Table 6: ASD 400.1 TH (L)

Part number / complete unit:		1-00185 (MD.21), 1-00195 (MD.17)
Filter configuration for dust and smoke:		Main filter module TH
(1)	Pocket filter F, fine dust filter	
	Filter class:	ISO ePM_1 80% in acc. with ISO 16890
(2)	Empty frame for pocket filter	
(3)	Particulate filter cassette H13	
	Filter class:	H13 HEPA filter, particulate air filter in acc. with EN 1822

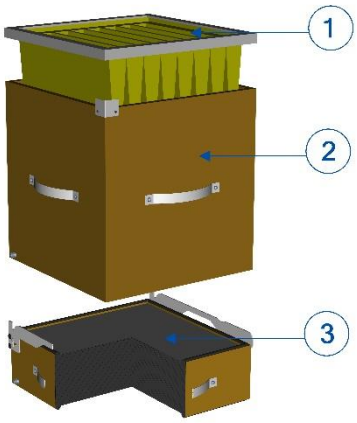

LAS Series – Laser Smoke

Areas of Application

Laser cutting | Laser marking | Laser structuring | Laser engraving

Operating Principle

On the clean gas side of the filter, an EC blower with a high pressure reserve generates a volumetric flow rate that is matched to the target application. The volumetric flow rate can be individually regulated to a freely adjustable setting. The raw gas containing pollutants or harmful substances is thus reliably extracted.

Laser smoke is produced in a wide range of different work processes in which lasers are used. This toxic, corrosive mixture of aerosol, gas, and nanoparticles represents a health hazard and has a negative impact on the quality of products and the machining process. Depending on the particular machining process, the resulting mixtures of substances that are produced and need to be removed from the raw gas can differ greatly.

Filter solutions with pre-filter combinations for separation of particles are available for this in the LAS series. By regularly changing the pre-filtration elements at shorter intervals it is possible to preserve the functionality of the main filter for a long period of time.

Finest suspended solids are retained by the HEPA H14 filter of the particulate filter cassette H14. This guarantees a particle separation rate of 99.995%.

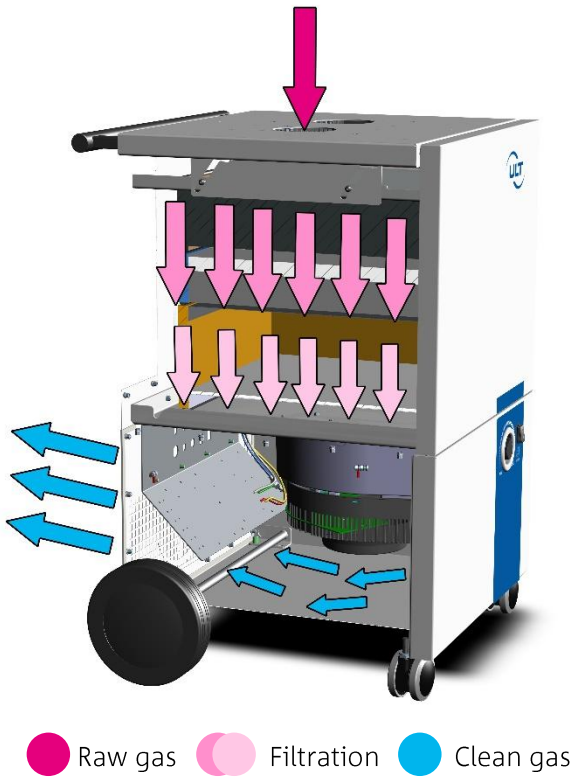

The separation (adsorption) of air impurities in the form of gas or vapor takes place in the activated carbon fill of the adsorption filter.

The filtration effect of the activated carbon is based on adsorption, i.e. the process by which (gaseous) substances adhere to the surface of the activated carbon. In general, physical adsorption does not involve any chemical changes to the substance being adsorbed. The design of the filter is based on the nominal volumetric flow rate of the units, while the contact time is designed for medium adsorption behavior.

Thanks to the high degree of purification, the filtered clean gas can be directed back to the working space (recirculated air mode). As a result there are no thermal losses.

Recirculated air mode is not permitted when the equipment is used to extract substances that are carcinogenic, mutagenic, or toxic for reproduction. In these cases the optional outlet nozzle should be mounted on the outlet side. The filtered clean gas must be directed via a connected pipe section into a central air outlet system.

Device Variants

Various filter combinations are available for the extraction and filtration of harmful gas/dust mixtures from laser machining processes. The suitability of the different filter combinations that are available for separating out the impurities depends on the machining process in question. For competent advice and help choosing the right filter combination, please contact your local dealer or get in touch with ULT AG directly via ult@ult.de.

The devices in the ULT 400.1 series can be equipped with the following filter configurations based on the individual customer requirements:

LAS 400.1 FHA14 (M)

The pre-filter consists of a panel filter. It retains a large proportion of the particles in the laser smoke and prevents premature saturation of the downstream H14 main filter element. The large activated carbon layer in the activated carbon filter cassette ensures a high separation rate for the gases and vapors that are potentially harmful to health. This multi-stage filter configuration is particularly well suited to the separation of dry laser smoke with a low proportion of gases.

Table 7: LAS 400.1 FHA14 (M)

Product number / complete unit:			1-00186 (MD.21), 1-00196 (MD.17)
Filter configuration for laser smoke:			Main filter module FHA14
(1)	Pre-filter Panel filter F		
		Filter class:	ISO ePM_1 80% in acc. with ISO 16890
(2)	Particulate filter cassette H14		
		Particulate air filter H14	
		Filter class:	H14 HEPA filter, particulate air filter in acc. with EN 1822
(3)		Adsorption filter A	
		Filter medium:	Activated carbon fill, 14 kg

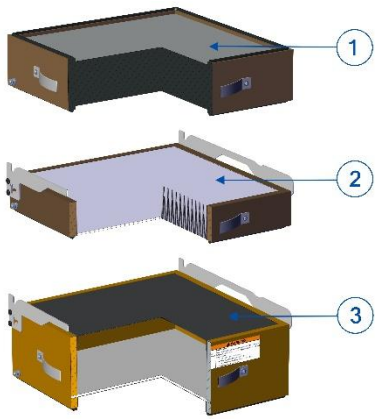

LAS 400.1 FHA28 (L)

Alternatively, a device version with two activated carbon filter cassettes is also available. The pre-filter consists of a large panel filter. It retains large amounts of laser smoke and prevents premature saturation of the downstream H14 main filter element. The two large activated carbon layers in the activated carbon filter cassettes ensure a high separation rate for the gases and vapors that are potentially harmful to health. This multi-stage filter configuration is particularly well suited to the separation of dry laser smoke with a high proportion of unwanted gases and odors.

Table 8: LAS 400.1 FHA28 (L)

Product number / complete unit:			1-00187 (MD.21), 1-00197 (MD.17)
Filter configuration for laser smoke:			Main filter module FHA28
(1)	Pre-filter Panel filter F		
	Filter class:		ISO ePM_1 80% in acc. with ISO 16890
(2)	Particulate filter cassette H14		
		Particulate air filter H14	
		Filter class:	H14 HEPA filter, particulate air filter in acc. with EN 1822
(3)		Adsorption filter A	
		Filter medium:	Activated carbon fill, 14 kg
(4)		Adsorption filter A	
		Filter medium:	Activated carbon fill, 14 kg

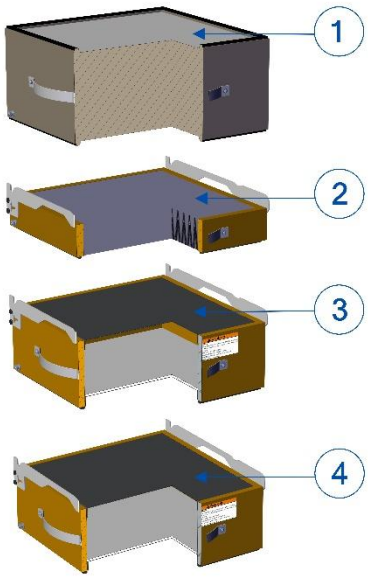

LAS 400.1 FH (M)

A device version without activated carbon filter cassettes is available for laser machining processes in which no gases are generated (e.g. pure metalworking). A larger pre-filter consisting of a large panel filter retains large amounts of laser smoke and prevents premature saturation of the downstream H14 main filter element.

Table 9: LAS 400.1 FH (M)

Product number / complete unit:		1-00201 (MD.21), 1-00202 (MD.17)
Filter configuration for laser smoke:		Main filter module FH
(1)	Pre-filter Panel filter F	
	Filter class	ISO ePM_1 80% in acc. with ISO 16890
(2)	Particulate filter cassette H14	
	Filter medium:	H14 HEPA filter, particulate air filter in acc. with EN 1822

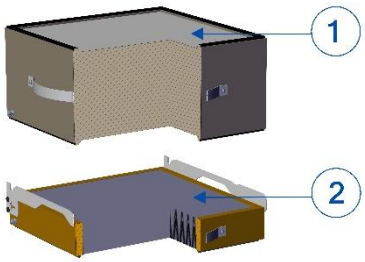

LRA Series – Soldering Fumes

Areas of Application

Manual Soldering | Robot Soldering | Soldering Systems at Special Workplaces

Operating Principle

On the clean gas side of the filter, an EC blower with a high pressure reserve generates a volumetric flow rate that is matched to the target application. The volumetric flow rate can be individually regulated to a freely adjustable setting. The raw gas containing pollutants or harmful substances is thus reliably extracted.

During soldering work, soldering fumes are formed from evaporating soldering flux, small amounts of solder, as well as outgassing substances from processed circuit boards and components. The fumes consist of a mixture of sticky aerosols, particles, and gases that need to be removed from the raw gas.

The filter configuration used for this has been specially designed for the application. An upstream expanded metal filter retains cooled-down sticky aerosols and prevents premature saturation of the downstream filter elements. The expanded metal filter can be cleaned in an industrial washer and can therefore be used multiple times.

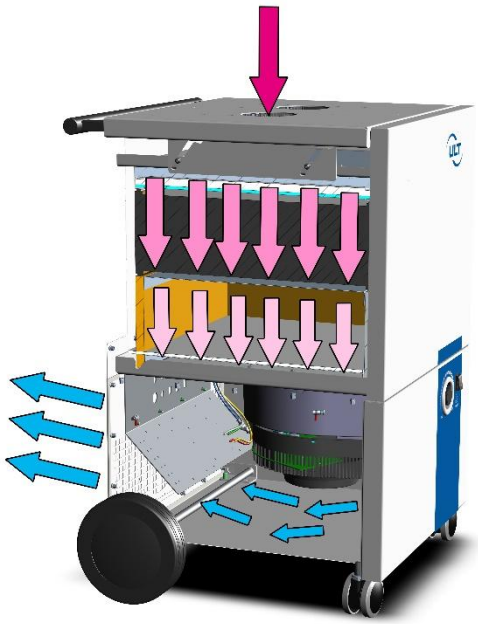

Raw gas Filtration Clean gas

Particles contained in the soldering fumes are separated in a multi-stage storage filtration system. Thanks to their depth effect, the filter pads used are particularly well suited to the separation of soldering fumes. A large proportion of the particles contained in the soldering fumes and of the aerosols still remaining in the raw gas is captured through adsorption at this point. Finest suspended solids are retained by the HEPA H13 filter of the particulate filter cassette H13. This guarantees a particle separation rate of 99.95%.

The separation (adsorption) of air impurities in the form of gas or vapor takes place in the activated carbon fill of the adsorption filter.

The filtration effect of the activated carbon is based on adsorption, i.e. the process by which (gaseous) substances adhere to the surface of the activated carbon. In general, physical adsorption does not involve any chemical changes to the substance being adsorbed. The design of the filter is based on the nominal volumetric flow rate of the units, while the contact time is designed for medium adsorption behavior.

Thanks to the high degree of purification, the filtered clean gas can be directed back to the working space (recirculated air mode). As a result there are no thermal losses.

Recirculated air mode is not permitted when the equipment is used to extract substances that are carcinogenic, mutagenic, or toxic for reproduction. In these cases the optional outlet nozzle should be mounted on the outlet side. The filtered clean gas must be directed via a connected pipe section into a central air outlet system.

Device Variants

The units in the ULT 400.1 series can be equipped with the following filter configuration for extraction and filtration of harmful gas/dust mixtures from soldering processes:

LRA 400.1 HA14

Table 9: LRA 400.1 HA14

Product number / complete unit:	1-00188 (MD.21), 1-00198 (MD.17)
Filter configuration for soldering fumes:	Main filter module HA14
(1) Expanded metal pre-filter Metal mesh, condensation filter, spark protection	
(2) Filter pads M5/F7	
Filter classes:	Filter pad M5: ISO Coarse 85% in acc. with ISO 16890 Filter pad F7: ISO ePM_{10} 75% in acc. with ISO 16890
(3) Particulate filter cassette H13	
Particulate filter H13	
Filter class:	H13 HEPA filter, particulate air filter in acc. with EN 1822
(4) Adsorption filter A	
Filter medium:	Activated carbon fill, 14 kg

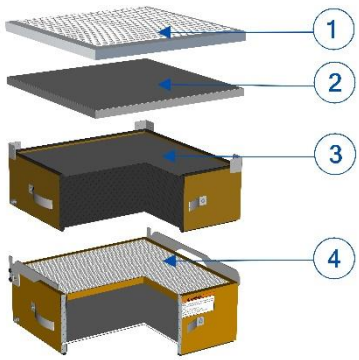

Accessory items

Suction system DN80

Hoses

Flexible suction hose DN 80, 2 m	Antistatic, incl. 90° bend, sleeve, and worm-drive hose clips	3-00489
Flexible suction hose DN 80, 3 m	Antistatic, incl. 90° bend, sleeve, and worm-drive hose clips	3-00490
Flexible suction hose DN 80, 5 m	Antistatic, incl. 90° bend, sleeve, and worm-drive hose clips	3-00491
Flexible suction hose DN 80, by the meter	Antistatic, without accessories	6-06874

Hose accessories

Reduction from 1x DN 80 sleeve to 2x DN 50 connecting pieces	Incl. 90° bend and worm-drive hose clips for intake nozzle DN 80	3-01319
Bend 90° DN 80	Antistatic, incl. worm-drive hose clips	3-00496
Sleeve DN 80	Antistatic, incl. worm-drive hose clips	3-00497
Reduction from DN 80 to DN 75	Antistatic, for connection of DN 80 hose to extraction arm system 75, incl. worm-drive hose clips	3-00499

Elements for extraction arm installation and intake nozzles

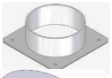

Tabletop stand, white	Alsident system 75, accessories	2-7510
Device console bracket 1x S75 extraction arm	For retrofitting Incl. installation accessories and connecting hose	3-01280
Intake nozzle DN 80	For retrofitting	3-01331
Intake blind cover	For retrofitting	3-01333

Extraction arms

Alsident system 75 Extraction arm	1290 mm for tabletop/device mounting	75-6555-1-5

Collection elements

Flat hood	Alsident system 75, accessories	1-753324-5
Round hood, aluminum	Alsident system 75, accessories	1-7524-5
Suction tip	Alsident system 75, accessories	1-7525

Suction system DN100

Hoses and hose accessories

Flexible suction hose DN 100, by the meter	Antistatic, without accessories	6-06875
Sleeve DN 100	Antistatic, incl. worm-drive hose clips	3-00500

Elements for extraction arm installation and intake nozzles

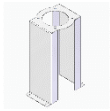

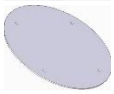

Console bracket 1x S100 extraction arm	For retrofitting Incl. installation accessories and connecting hose	3-01330
Intake nozzle DN 100	For retrofitting	3-01332
Intake blind cover	For retrofitting	3-01333

Extraction arms

Alsident system 100 extraction arm	1370 mm for tabletop/device mounting	100-6555-1-5

Collection elements

Flat hood	Alsident system 100, accessories	1-1004228-5
Round hood, PETG, 500 mm	Alsident system 100, accessories	1-10050-5
Round hood, aluminum, white, 200 mm	Alsident system 100, accessories	1-10024-5

Air Outlet System DN 160

Hoses and hose accessories

Suction hose DN 160, by the meter	Antistatic, without accessories	6-16402

Nipple DN 160	Antistatic	6-07282

Interface Accessories

Accessories for interface M12

Foot switch ON/OFF M12	Incl. M12 male adapter, Length 3 m	3-00235
Connecting cable M12	Incl. M12 adapter, Length 3 m	3-00234

Replacement Filters

ACD

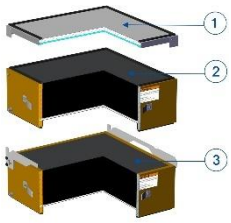

Filter A28	
Filter mat M5	4-00210
Set of filter mat M5, set of 10	4-00214
Interchangeable frame with filter pad M5	4-00869
Adsorption filter cassette A14* *2x per unit	4-00861

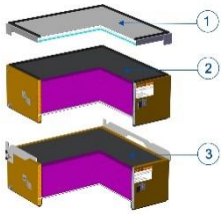

Filter AC39	
Filter mat M5	4-00210
Set of filter mat M5, set of 10	4-00214
Interchangeable frame with filter pad M5	4-00869
Chemisorption filter cassette 50%/50% AC19* *2x per unit	4-00882

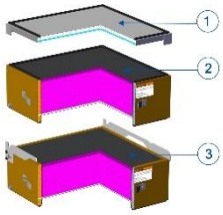

Filter C50	
Filter mat M5	4-00210
Set of filter mat M5, set of 10	4-00214
Interchangeable frame with filter pad M5	4-00869
Chemisorption filter cassette C25* *2x per unit	4-00883

ASD

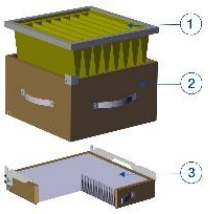

Filter TH (M)	
Pocket filter F9	4-00924
Empty frame for pocket filter	4-00860
Particulate filter cassette H14	4-00864

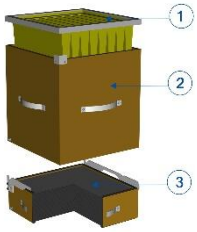

Filter TH (L)	
Pocket filter F9	4-00923
Empty frame for pocket filter	4-00859
Particulate filter cassette H13	4-00866

LAS

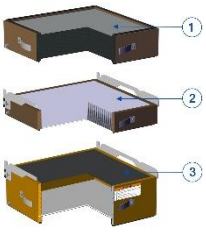

Filter FHA14 (M)	
Particulate filter F	4-00868
Particulate filter H14	4-00864
Adsorption filter cassette A14	4-00861

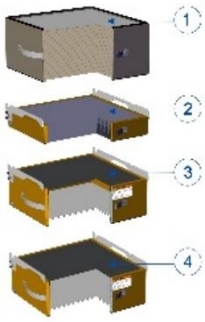

Filter FHA28 (L)	
Particulate filter F	4-00865
Particulate filter H14	4-00864
Adsorption filter cassette A14* *2x per unit	4-00861

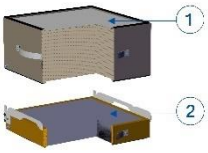

Filter FH (L)	
Particulate filter F	4-00865
Particulate filter H14	4-00908

LRA

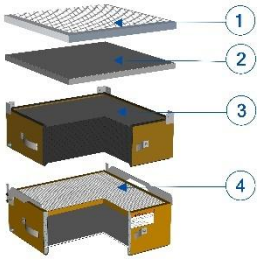

Filter HA14	
Expanded metal filter	4-00875
Set of filter mat M5, F7	4-00219
Set of 10 filter mat M5, F7	4-00220
Particulate filter cassette H13	4-00866
Adsorption filter cassette A14	4-00861

Set of replacement films

Set for film change	3-01315

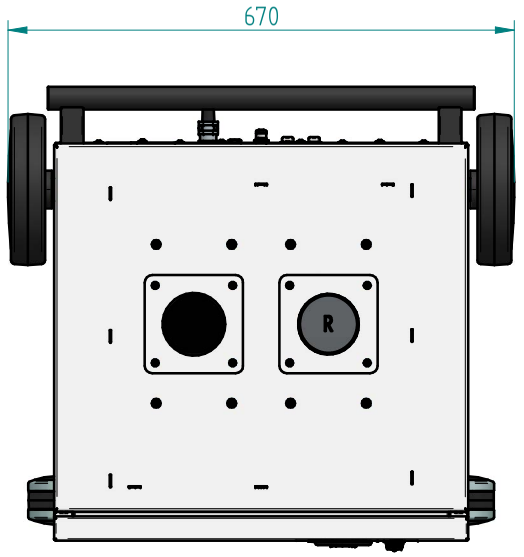

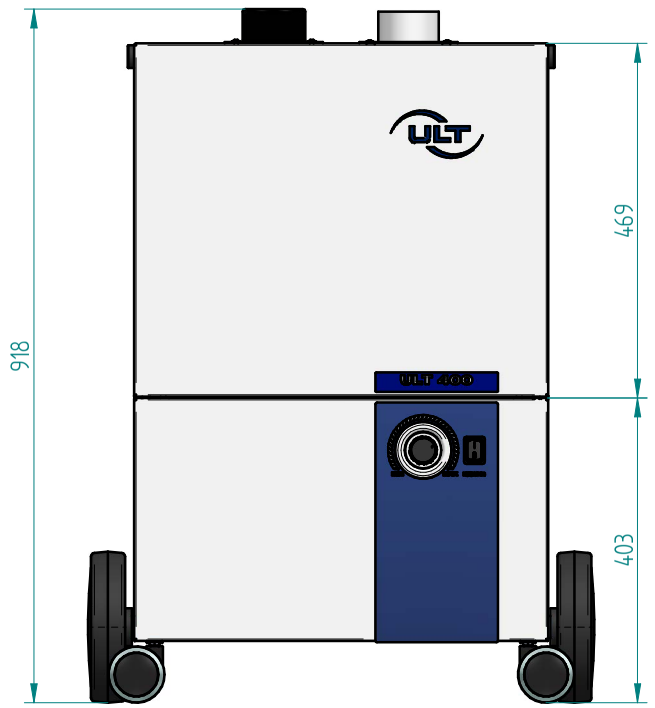

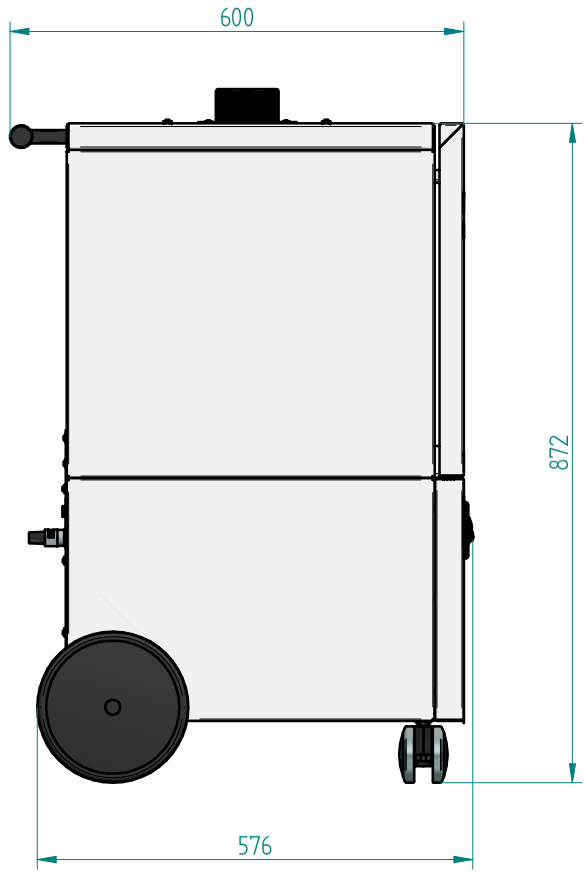

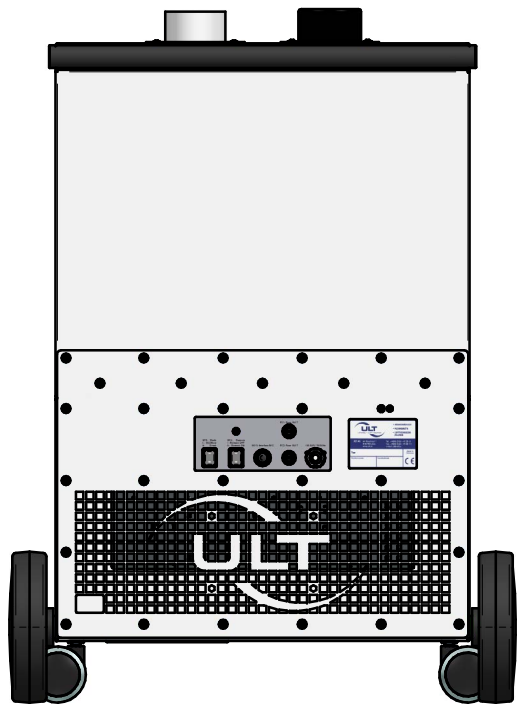

Aktuelle Änderung

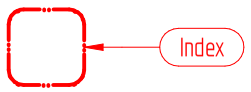

Revisionen

Index	Beschreibung	Blatt	Datum	Bearbeiter
000	Basis		29.01.2024	B.Jüngling

Abteilung	Technische Referenz	Dokumentenstatus	Gewicht	Erstellt von	Erstellt am
ULT Konstruktion	S.Fischer	Verfügbar	0,000 kg	B.Jüngling	14.03.2023

ULT air quality

ULT AG
Am Göpelteich 1
D-02708 Löbau

Schutzvermerk ISO 16016 beachten.

Titel / Untertitel: Komplettgerät S

Geprüft von:

Geprüft am:

Dokumententyp: Illustration

Dokumentennummer	Revision	Sprache	Maßstab	Blatt
PlutoXL_00_100	000	DE	1:10	1 von 1

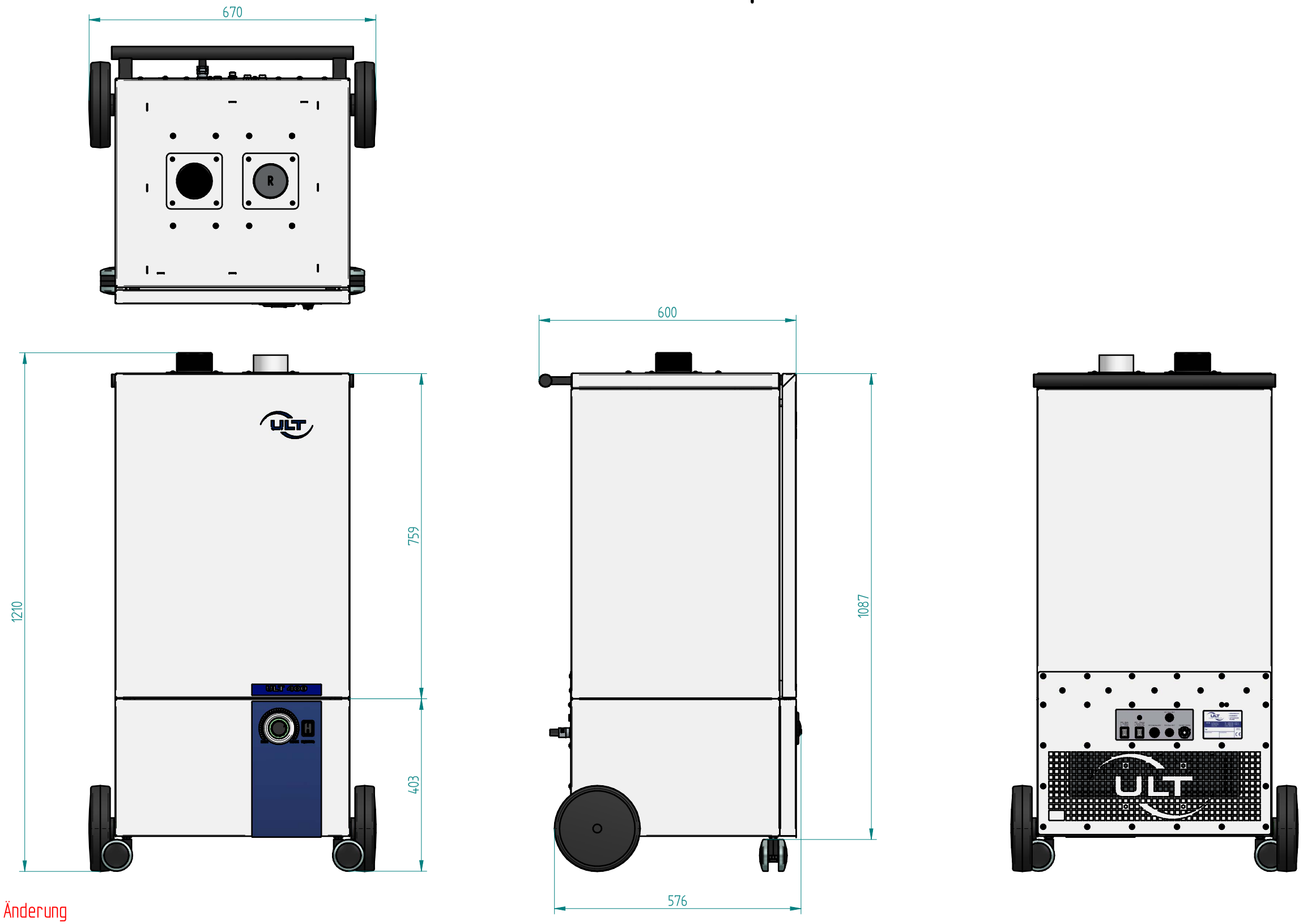

Aktuelle Änderung

Index

Revisionen				
Index	Beschreibung	Blatt	Datum	Bearbeiter
000	Basis		30.01.2024	B.Jüngling

Abteilung: ULT Konstruktion	Technische Referenz: S.Fischer	Dokumentenstatus: Verfügbar	Gewicht: 0,000 kg	Erstellt von: B.Jüngling	Erstellt am: 14.03.2023
ULT air quality ULT AG Am Göpelteich 1 D-02708 Löbau Schutzvermerk ISO 16016 beachten.		Titel / Untertitel: Komplettgerät L		Geprüft von:	Geprüft am:
				Dokumententyp: Illustration	
		Dokumentennummer: PlutoXL_00_101		Revision: 000 / Sprache: DE	Maßstab: 1:10 / Blatt: 1 von 1

Design A: Internal power supply

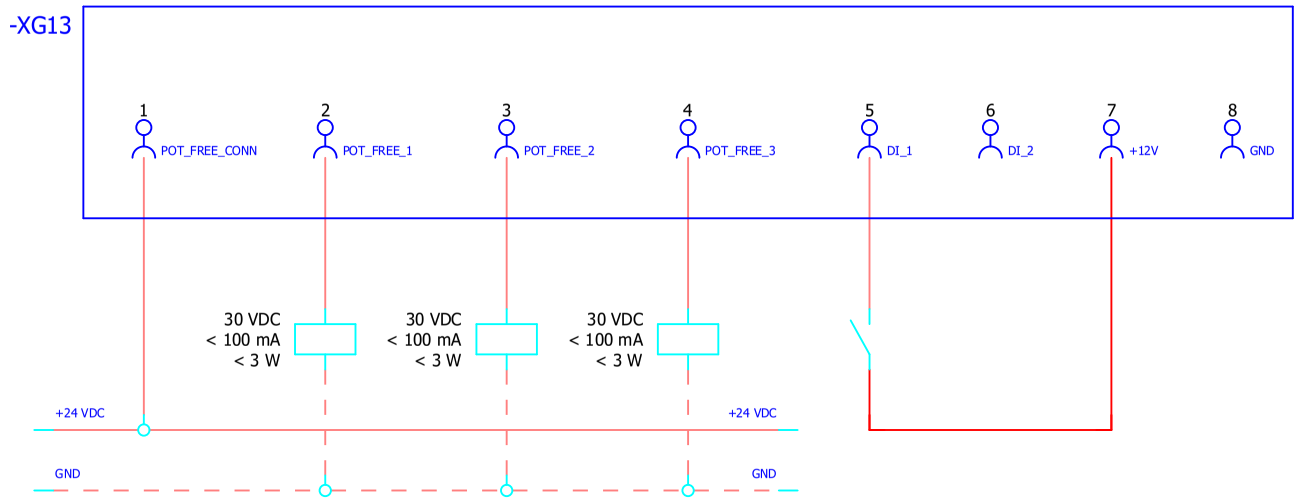

XG13 DIN EN 61076-2-101 / M12 / A-coded / 8-pin / Female					
PIN	**Function**	**Potential**	**Rating**	**Status**	**Description**
1-2	Status operation (1)	Potential free	< 30 VDC < 100 mA	Open	Machine out of operating
				Closed	Machine operating
1-3	Status filter (1)	Potential free	< 30 VDC < 100 mA	Open	Filter 80% depleted
				Closed	Filter OK
1-4	Status filter (1)	Potential free	< 30 VDC < 100 mA	Open	Filter 100% depleted
				Closed	Filter OK
5-7	Remote ON/OFF (2)	24 VDC	24 VDC	High	Maschine ON
				Low	Maschine OFF

Note (1): Signals are only to be evaluted when the unit is connected to supply voltage and the main switch is ON.

Note (2): Control with internal power supply (pin 7) or with external customer power supply (max. 24 VDC). The GND from the external power supply must be connected to the GND from the machine (pin 8).

Design B: External customer power supply

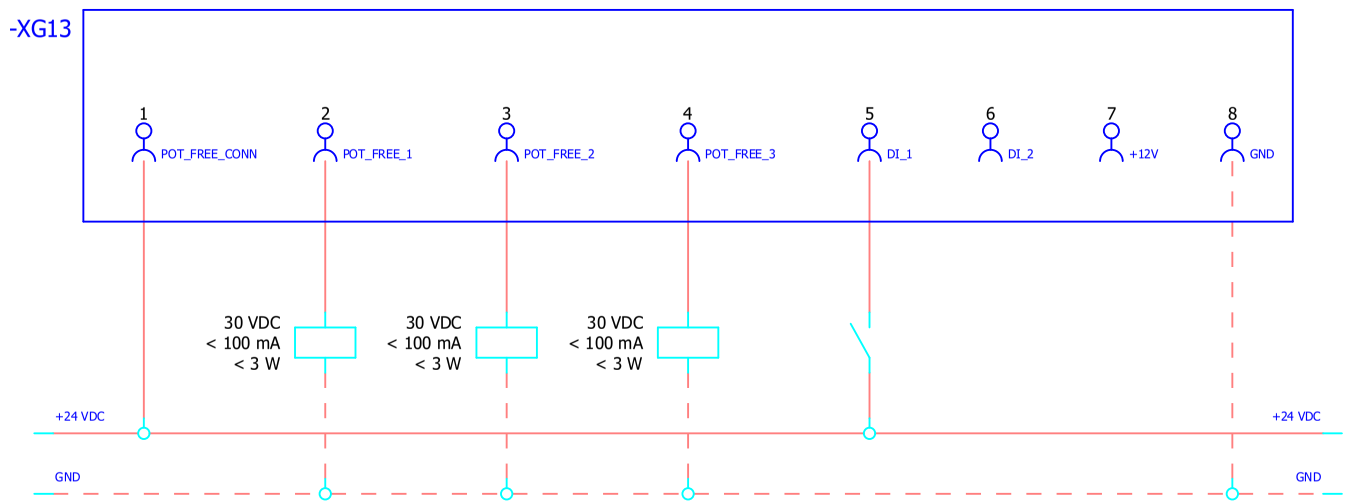

==+&EPC/1

ULT AG
Am Göpelteich 1, 02708 Löbau
Phone: +49 (0) 3585-4128-0
Mail: ult@ult.de

Copyright according to ISO 16016.

Document Title ULT 400.1 MD21	Department Design	Technical reference R.Schütze	Created by R.Schütze	Created on 20.12.2022	Document status Available	Document type ePlan
	Page description Interface I/O		Checked by	Checked on	Document identifier / page number ==X1+CE1&EFS/3	
	Document number ULT 400.1_60_002		Approved by	Approved on	Revision 000	Page 22 / Pages 23

ULT AG
Am Göpelteich 1
02708 Löbau
Germany

Phone: +49 3585 4128-0
Fax: +49 3585 4128-11
E-mail: ult@ult.de
Website: www.ult.de

air quality